PoWer TIG Series

GeKaMac®

PoWer TIG 4000
DC Pulse-HW

Users Manual

Please Read and Understand This Manual
Before Operating The Welding Machine

www.gedikwelding.com

This machine is for internal use only.

It complies with the WEEE Directive.

This machine has been designed in accordance with the EN 60974-1 and EN 60974-10 standards.

The machine is safe when installation, operation, and maintenance are performed in accordance with the user manual and regulations. The operator and machine owner are responsible for adhering to safety rules.

Gedik Kaynak San. Ve Tic. A.Ş. assumes no responsibility for safety or CE compliance if any modifications are made to the machine or if safety rules are not followed.

This Class A equipment is not suitable for use in homes and similar residential areas where the power supply is provided by the low-voltage public electricity network.

This machine is not household waste and cannot be disposed of in the trash.

When the machine reaches the end of its service life or becomes obsolete, it must be disposed of in accordance with regulations.

COMPLIES WITH THE WEEE DIRECTIVE.

Eco Design Statement

This machine has been designed and manufactured in accordance with the requirements of the 2009/125/EC Eco Design Directive concerning the environmentally friendly design of energy-related products.

Accordingly, machines with an idle mode are as follows.

	Idle Mode
MMA	**X**
MIG	√
TIG	√
Plazma	√
SAW	**Out of Scope**

Efficiency measurements should be conducted only on the power unit. The water cooling system should be disabled. For more information on measurements and machine settings, Gedik Kaynak Sanayi ve Ticaret A.Ş. should be consulted.

AT UYGUNLUK BEYANI

EU DECLARATION OF CONFORMITY

Bu uygunluk beyanı yalnızca imalatçının sorumluluğu altında düzenlenir.

This declaration of conformity is issued under the sole responsibility of the manufacturer.

İstanbul, Turkey, 08.03.2024

İmalatçı / Manufacturer

GEDİK KAYNAK SANAYİ ve TİCARET A.Ş.

Ankara Cad. No.306 Seyhli Pendik ISTANBUL TURKIYE

Ürün / Product	ARC WELDING MACHINE
Marka-Model / Brand- Model	POWER TIG 4000 DC PULSE HW

Yukarıda tanımlanan beyanın nesnesi ilgili uyumlaştırılmış AB mevzuatı ile uyumludur.

The object of the declaration described above, is in conformity with the relevant union harmonisation legislation.

Direktifler / Directives 2014/30/EU & 2014/35/EU

Uyumlaştırılmış standartlar ve uygunluğun deklare edilmesiyle ilişkili diğer referanslar.

References to the relevant harmonised standarts used and references to the other technical specifications in relation to which conformity is declared.

EN 60974-1:2018+A1:2019
EN 60974-10:2014+A1:2015

Bu ekipman, talimatlara uygun kurulduğunda, bakımı yapıldığında ve kullanıldığında belirtilen standartlara uygundur. Makine üzerinde bir değişiklik yapıldığında veya yanlış kullanımda deklarasyon geçersiz olur.

The equipment is in compliance with pertinent legislation when installed, utilized, and maintained in accordance with the enclosed instructions. This declaration will be invalid under any modification or improper use.

İmalatçı Adına imzalayan / Signed for and on behalf of:

Hatice Özel, Equipment Business Unit Director

Dear Customer

Thank you for choosing our product! This instruction manual will help you get to know your new machine. Read the manual carefully and you will soon be familiar with all the many great features of your new product. Please also take special note of the safety rules in the manual and follow exactly the instructions.

If you treat your product carefully, this definitely helps to prolong its enduring quality and reliability. For more information, please contact us or consult authorized distributor.

The products in the manual may be changed
without prior notice. The model you purchase is:

☐ **PoWer TIG 4000 DC Pulse-HW**

Please find corresponding models from the "Contents".

Important:
Please read carefully the safety rules given in the manual and follow exactly the instructions to avoid potential hazard and injury.

Safety Rules

"Danger" indicates an imminently hazardous situation which, if not avoided, will result in death or serious injury.

"Warning!" indicates a possible hazardous situation which, if not avoided, could result in death or serious injury. The possible hazards are explained in the text.

"Caution" indicates a possible hazardous situation which, if not avoided, may result in slight or moderate injury.

"Note!" indicates a situation which implies a risk of impaired welding result and damage to the equipment.

"Important!" indicates practical tips and other useful special-message. It is no signal word for a harmful or dangerous situation.

Utilization for intended purpose only

- The machine may only be used for jobs as defined by the "Intended purpose".
- Utilization for any other purpose, or in any other manner, shall be deemed to be "not in accordance with the intended purpose". The manufacturer shall not be liable for any damage resulting from such improper use.

Safety signs

- All the safety instructions and danger warnings on the machine must be kept in legible condition, not removed, not be covered, pasted or painted cover.

Safety inspection

- The owner/operator is obliged to perform safety inspection at regular intervals.
- The manufacturer also recommends every 3-6 months for regular maintenance of power sources.

Electric shock can kill

- Touching live electrical parts can cause fatal shocks or severe burns. The electrode and work circuit is electrically live whenever the output is on. The input power circuit and machine internal circuits are also live when power is on. In MIG/MAG welding, the wire, drive rollers, wire feed housing and all metal parts touching the welding wire are electrically live. Incorrectly installed or improperly grounded equipment is a hazard.
- Do not touch live electrical parts of the welding circuit, electrodes and wires with your bare skin or wet clothing.
- The operator must wear dry hole-free insulating welding gloves and body protection while performs the welding.
- Insulate yourself from work and ground using dry insulating protection which is large enough to prevent you full area of physical contact with the work or ground.
- Connect the primary input cable according to rules. Disconnect input power or stop machine before installing or maintenance.
- If welding must be performed under electrically hazardous conditions as follow: in damp locations or wearing wet clothing; on metal structures such as floors, gratings, or scaffolds; when in cramped positions such as sitting, kneeling, or lying; or in occasion when there is a high risk of unavoidable or accidental contact with the work piece or ground. Must use additional safety precautions: semiautomatic DC constant voltage (wire) welder, DC manual (Stick) welder and AC welder with reduced open-load voltage.
- Maintain the electrode holder, ground clamp, welding cable and welding machine in good, safe operating condition. Replace damaged part immediately.

Electric and magnetic fields (EMF) may be dangerous

- If electromagnetic interference is found to be occurring, the operator is obliged to examine any possible electromagnetic problems that may occur on equipment as follow:

- mains, signal and data-transmission leads
- IT and telecoms equipment
- measurement and calibration devices
- Wearers of pacemakers

- Measures for minimizing or preventing EMC problems:

– Mains supply

If electromagnetic interference still occurs, despite the fact that the mains connection in accordance with the regulations, take additional measures

– Welding cables

Keep these as short as possible
Connect the work cable to the work piece as close as possible to the area being welded.
Lay term well away from other cables.
Do not place your body between your electrode and work cables.
- Equipotential bonding
- Workpiece grounding (earthing)
- Shielding

Shield the entire welding equipment and other equipment nearby.

ARC rays can burn

- Visible and invisible rays can burn eyes and skin.
- Wear an approved welding helmet or suitable clothing made from durable flame-resistant material (leather, heavy cotton, or wool) to protect your eyes and skin from arc rays and sparks when welding or watching.
- Use protective screens or barriers to protect other nearby personnel with suitable, non-flammable screening and/or warn them not to watch the arc nor expose themselves to the arc rays or to hot spatter or material.

Fumes and gases can be dangerous

- Welding may produce fumes and gases, breathing these fumes and gases can be hazardous to your health.
- When welding, keep your head out of the fume. If inside, ventilate the area at the arc to keep fumes and gases away from the breathing zone. If ventilation is not good, wear an approved air-supplied respirator.
- Work in a confined space only if it is well ventilated, or while wearing an air-supplied respirator.
- Welding fumes and gases can displace air and lower the oxygen level causing injury or death. Always use enough ventilation, especially in confined areas, to insure breathing air is safe.

Welding and cutting sparks can cause fire or explosion

- When not welding, make sure the electrode circuit is not touching the work or ground. Accidental contact can cause sparks, explosion, overheating, or fire. Make sure the area is safe before doing any welding.
- Welding and cutting on closed containers, such as tanks, drums, or containers, can cause them to blow up. Make sure proper steps have been taken.
- When pressure gas is used at the work site, special precautions are required to prevent hazardous situations.
- Connect work cable to the work as close to the welding zone as practical to prevent welding current from passing too long and creating fire hazards or overheat.
- Wear oil-free protective garments such as leather gloves, heavy shirt, cuffless trousers, high shoes, and a cap. Wear ear plugs when welding out of position or in confined places. Always wear safety glasses with side shields when in a welding area.
- Be attention that welding sparks and hot materials from welding can easily go through small cracks and openings to adjacent areas and start a fire. Remove fire hazardous from the welding area, if not possible, cover them thoroughly. Do not weld where flying sparks can strike flammable material and where the atmosphere may contain flammable dust, gas, or liquid vapors (such as gasoline).
- Protect yourself and others from flying sparks and hot metal. Remove any combustibles from operator before perform any welding.
- Keep a fire extinguisher readily available.
- Empty containers, tanks, drums, or pipes which have combustibles before perform welding.
- Remove stick electrode from electrode holder or cut off welding wire at contact tip when not in use.
- Apply correct fuses or circuit breakers. Do not oversize or bypass them.

Cylinder can explode if damaged

- Pressure gas cylinders contain gas under high pressure. If damaged, a cylinder can explode. Since gas cylinders are normally part of the welding process, be sure to treat them carefully.
- Cylinders should be located away from areas where they may be struck or subjected to physical damage. Use proper equipment, procedures, and sufficient number of persons to lift and move cylinders.
- Always install cylinders in an upright position by securing to a stationary support or cylinder rack to prevent falling over or tipping.
- Keep a safe distance from arc welding or cutting operations and any other source of heat, sparks, or flame.
- No touching cylinder by welding electrode, electrode holder or any other electrically “hot” parts. Do not drape welding cables or welding torches over a gas cylinder.
- Use only correct compressed gas cylinders, regulators, hoses, and fittings designed for the process used; maintain them and associated parts in good condition.
- Use only compressed gas cylinders containing the correct shielding gas for the and properly operating regulators designed for the gas and pressure used. All hoses, fittings, etc. should be suitable for the application and maintained in good condition.

- Open the cylinder valve slowly and keep your head and face away from the cylinder valve outlet.
- Valve protection caps should be kept in place over valve expect when the cylinder is in use or connected for use.

Hot parts can burn

- Do not touch hot parts with bare hand or skin.
- Ensure equipment is cooled down before perform any work.
- If touching hot parts is needed, use proper tools and/or wear heavy, insulated welding gloves and clothing to prevent burns.

Flying metal or dirt can injure eyes

- When welding, chipping, wire brushing, and grinding can cause sparks and flying metal. It can hurt your eyes.
- Remember wear appropriate safety glasses with side shields when in welding zone, even under your welding helmet.

Noise can damage hearing

- Noise from some processes or equipment can damage hearing.
- Remember wear approved ear protection to protect ears if noise level is high.

Moving parts can injure

- Stay away from moving parts such as fans.
- Stay away from pinch points such as drive rolls.
- Keep all doors, panels, covers, and guards closed and securely in place.
- Have only qualified persons remove doors, panels, covers, or guards for servicing and maintenance.
- Reinstall doors, panels, covers, or guards when servicing and maintenance is finished and before reconnecting input power.

Overuse can cause overheating

- Use machine follow duty cycle. Reduce current or reduce duty cycle before starting to weld again.
- Allow cooling period.
- Do not block or filter airflow to unit.

Static can damage PCB

- Always wear wrist straps before touching PCB or parts.
- Use proper static-proof bags and package to store or move PCB.

Safety markings

- Equipment with CE-markings meets the basic requirements of the Low-Voltage and Electromagnetic Compatibility Guideline (e.g. relevant product standards according to EN 60974).

Safety markings

- The equipment with the CCC mark meets the basic requirements stipulated in the Chinese standards GB / T15579.1-2013 and GB / T8118.

Safety markings

- This marking means that the product is certified for both the U.S. and Canadian markets, to the applicable U.S. and Canadian standards. The preferred location of the indicators is as shown.

Contents

1- GENERAL REMARKS **6**

1-1 Power source features 6
1-2 Functional principle 6
1-3 Output characteristics 7
1-4 Duty cycle 7
1-5 Applications 8
1-6 Warning label 8

2-VERSIONS BRIEFS **8**

3-BEFORE COMMISSIONING **9**

3-1 Utilization for intended purpose only 9
3-2 Machine installation rules 9
3-3 Power source connection 9
3-4 Welding cables instruction 9

4- PoWer TIG 4000 DC Pulse-HW **11**

4-1 System components 11
4-2 Basic equipments for welding 11
4-3 Control panel 12
4-4 Sub menu 15
4-5 Switch between gas cooling/water cooling 16
4-6 Restore to factory setting 17
4-7 Interface 17
4-8 Technical data 20
4-9 Dimension 20

5-HW 200 ..... **21**

5-1 features 21
5-2 Functional principle 21
5-3 Duty cycle 21
5-4 Interface 22
5-5 Technical data 22
5-6 Dimension 23

6-INSTALLATION AND OPERATION **23**

7-DISASSEMBLY AND REASSEMBLY **26**

8-TROUBLE SHOOTING **30**

9-CARE AND MAINTENANCE **33**

1- GENERAL REMARKS

1-1 Power source features

This series pulse TIG welding machine can perform DC TIG, Pulse TIG, and SMAW processes. This series welding machines enjoy reasonable static characteristic and sound dynamic characteristic.

Features and benefits:

-MCU controlled technology

-Self-diagnostic function with error code display

-Precise pulse control, good welding performance

-Pre-gas, post-gas, up-slope time, down-slope time, adjustable parameters, easy to control

-Pulse frequency, pulse ratio, pulse width can be adjusted to improve the welding performance

-Soft switch technology, high efficiency, high power factor.

-Can display the welding current and welding voltage at the same time

1-2 Functional principle

This series welding machines apply IGBT HF inverter technology. 3- phase input volt is rectified, then transformed into HF AC by the inverter which includes IGBT, etc., reduced by HF transformer, rectified and filtered by HF rectifier, then output. After this process, the welding machine dynamic response ability has been greatly improved, size and weight of transformer and reactor are reduced noticeably, and whole machine efficiency has been improved.

The design of control circuit makes the welding machine enjoy strong ability against power grid fluctuation and perfect welding performance. Welding machine has the following features: easy arc-starting, stable arc, good welding seam formation and capability of continuous welding current regulation. The schematic diagram is as shown in Fig. 1-2-1:

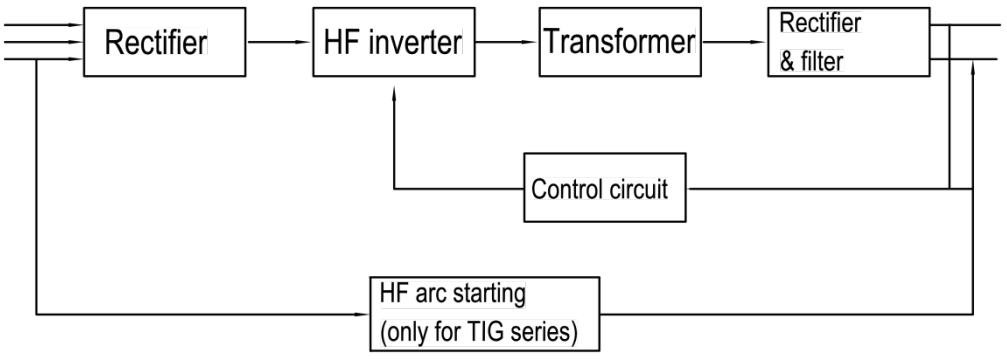

Fig. 1-2-1: Schematic diagram

1-3 Output characteristics

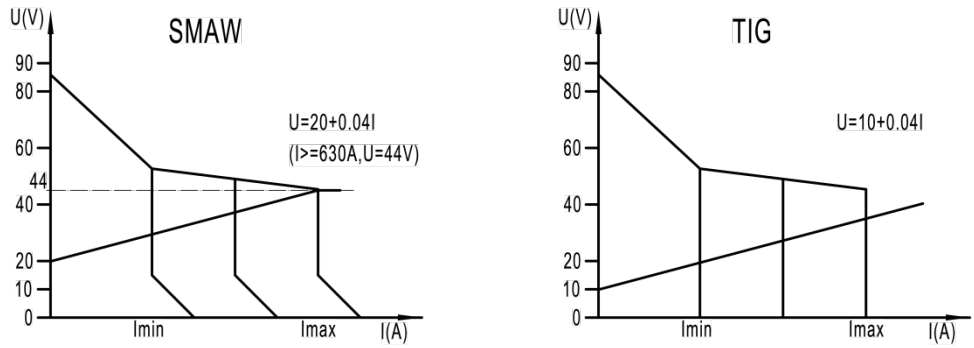

Fig. 1-3-1: Output characteristics

1-4 Duty cycle

Duty cycle is percentage of 10 minutes that a machine can weld at rated load without overheating. If overheats, thermostat(s) will open, output stops. Wait for fifteen minutes for the machine to cool down. Reduce amperage or duty cycle before welding.

Note! Exceeding duty cycle can damage the machine and greatly reduce its lifespan.

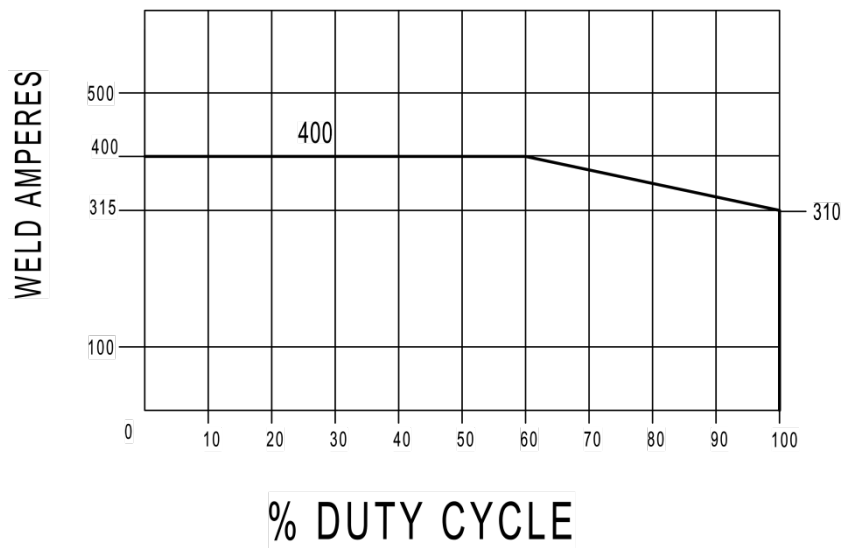

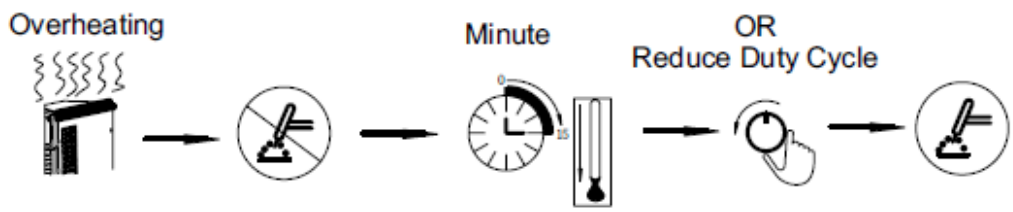

Fig. 1-4-1: Duty cycle

1-5 Applications

The power source is suitable for mild steel, alloy steel, stainless steel, copper, silver and titanium welding, and is designed for the following recommended areas:

-Electric power, petrochemical construction

-Boiler and pressure vessel

-Bicycle, fitness equipment, and stainless furniture manufacturing

-Nuclear power station

1-6 Warning label

The warning label is affixed on the top of machine.

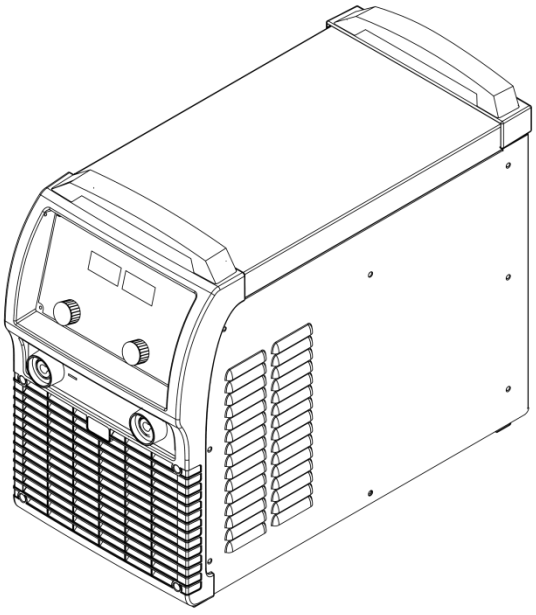

Fig. 1-6-1: Warning label

2-VERSIONS BRIEFS

This welding machine system consists of welding power, hot wire power, water cooler, wire feeder and welding torch, it is integrated structure of welding power, hot wire power and water cooler among them.

PoWer TIG 4000 DC Pulse-HW

Digital control panel. Accurate preset and adjustable parameters. Suitable for thin plate pulse mode welding. The rated welding current degree is 400A.

The hot wire system greatly improves the efficiency of TIG welding and at the same time provides the potential

for a wide range of applications.

3-BEFORE COMMISSIONING

Warning! Operating the equipment incorrectly can cause serious injury and damage. Do not use the functions described here until you have read and completely understood “safety rules”.

3-1 Utilization for intended purpose only

The power source may only be used for SMAW ,TIG. Utilization for other purposes, or in any other manner, shall be deemed to be "not in accordance with the intended purpose". The manufacturer shall not be liable for any damage resulting from such improper use. Operate, inspect and maintain should follow all the instructions given in this manual.

3-2 Machine installation rules

According to test, protection degree of this power source is IP23. However, the internal key components must be protected from direct soaking.

Warning! A machine that topples over or falls from its stand can cause injury. Place equipment on an even, firm floor in such a way that it stands firmly.

The venting duct is very important for safety protections. When choosing the machine location, make sure it is possible for the cooling air to freely enter and exit through the louvers on the front and back of machine. Any electro conductive metallic dust like drillings must not be allowed to get sucked into the machine.

3-3 Power source connection

- The power source is designed to run on the voltage given on the nameplate.

- The mains cables and plugs must be mounted in accordance with the relevant technical standards.

- The power supply sockets that come with power source are designed to use strictly according to the marked voltages.

Note! Inadequately dimensioned electrical installations can lead to serious damage. The mains lead, and its fuse protection, must be dimensioned in accordance with the local power supply. The technical data shown on the nameplate shall apply.

3-4 Welding cables instruction

When welding, please pay attention to the followings:

a. The welding cables should be kept as short as possible;

b. If extended cable is used, please do as shown in Fig. 3-4-1.

Wrong Coil the excess ground cable and welding cable in same direction respectively.	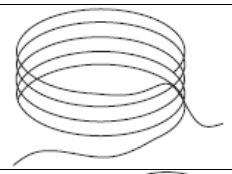
Correct Straighten the ground cable and welding cable and make them close to each other. Bundle the ground cable and welding cable together, running the wires close to the ground.	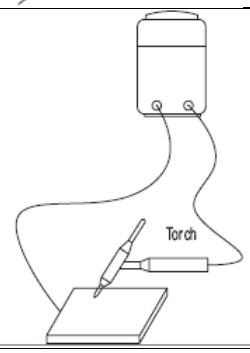
Correct When the excess cables are only be used by rolling up, coil the cables to two windings in reverse direction and overlap them. The number of turns for A is same as the number for B. Handle the welding cable and ground cable according to above-mentioned method.	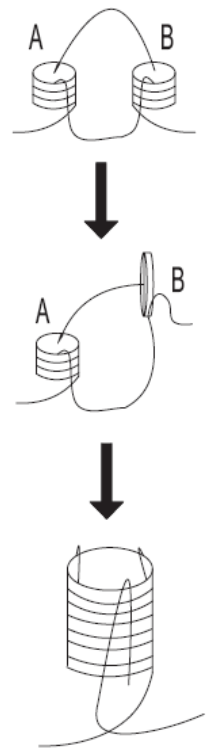

Fig. 3-4-1: Welding cables instruction

4- PoWer TIG 4000 DC Pulse-HW

4-1 System components

This series welding machine can be equipped with many different accessories and can be used in different special sites with different configurations.

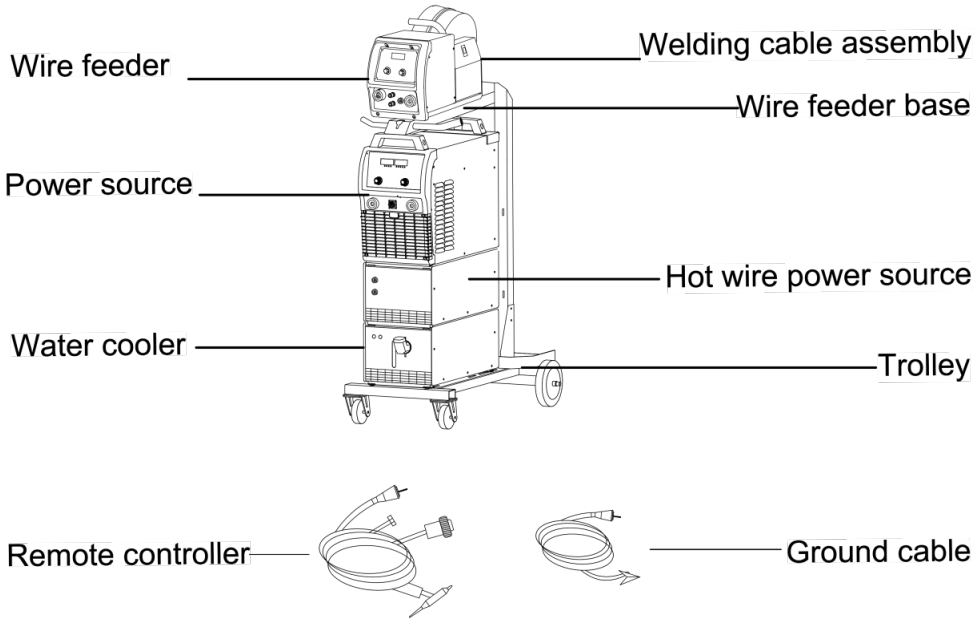

Fig. 4-1-1: System components

4-2 Basic equipments for welding

Only be equipped with the necessary accessories, can the power source operate well. The following is the needed accessories list.

TIG welding

-Power source
-Hotwire power source
-Water cooling machine
-Wirefeeder
-Ground cable
-TIG welding torch
-Gas regulator, gas hose, gas cylinder (to supply the machine with shielding gas)
-Welding wire

STICK welding

-Power source
-Ground cable
-Electrode holder
-Electrode

4-3 Control panel

Note! You may find that your machine has certain functions or some parameters that are not described in this operating manual. Also, certain illustrations may be very slightly different from the actual controls on your machine. However, these controls function in exactly the same way.

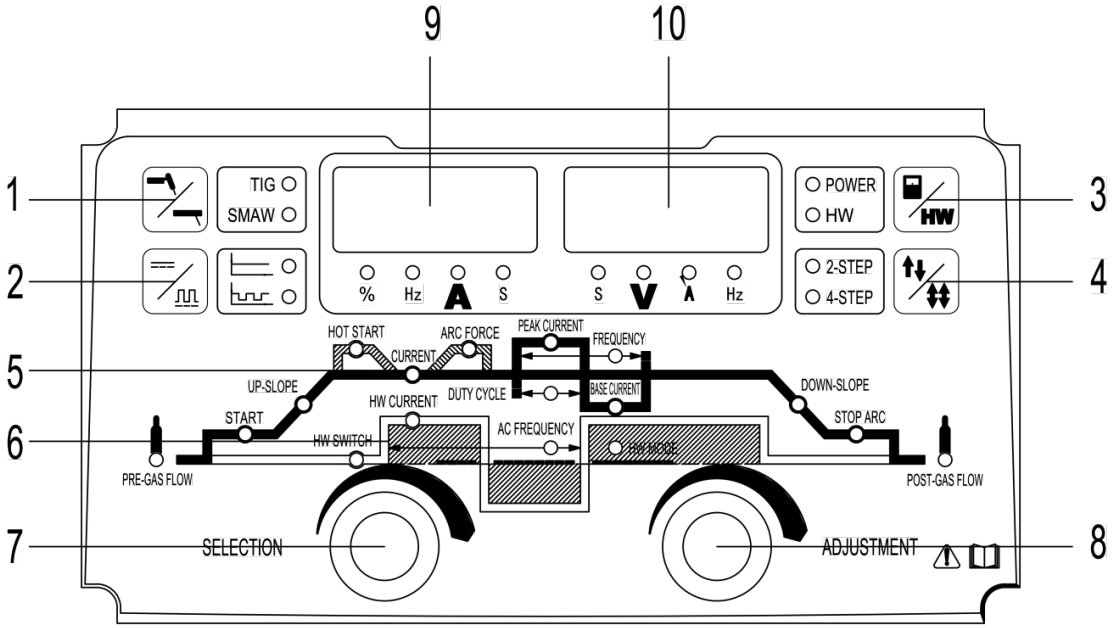

Fig. 4-3-1: Control panel

1.TIG/SMAW button: press this button to switch between TIG and SMAW(lock), the indicator will light up accordingly.

2.CC/PULSE button: on “TIG”: switch between “Constant” DC TIG and “Pulse” DC TIG.

3.POWER/HW button: switch button between welding power parameter and hot wire power parameter.

4.2-STEP/4-STEP button: press this button to switch between 2-step and 4-step operation mode, the indicator will light up accordingly. Torch operation mode:

Legend:

Fig. 4-3-2: Press torch trigger

Fig. 4-3-3: Hold torch trigger

Fig. 4-3-4: Release torch trigger

2-step operation mode

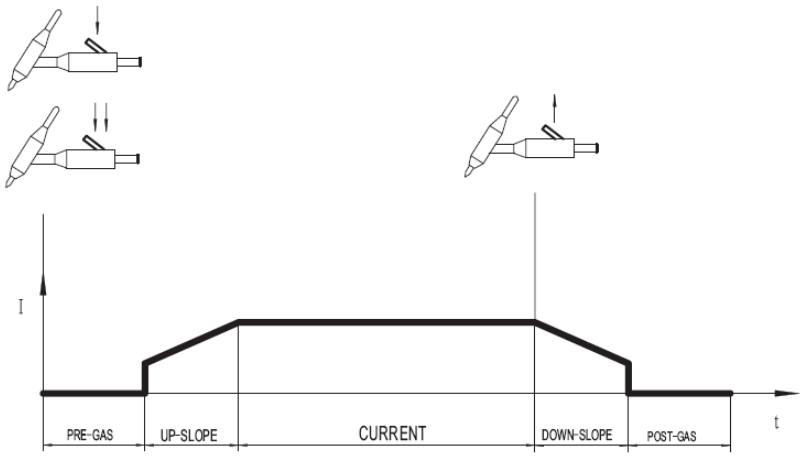

Fig. 4-3-5: 2-step operation mode

4-step operation mode

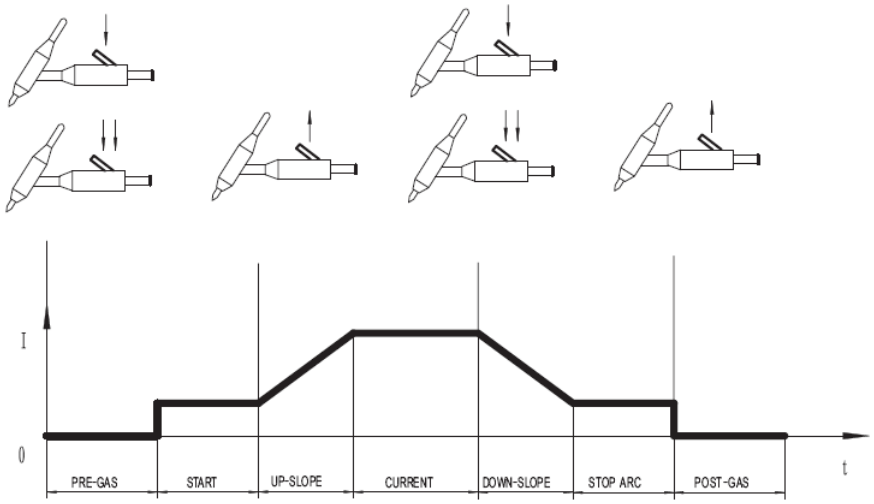

Fig. 4-3-6: 4-step operation mode

Repeat mode

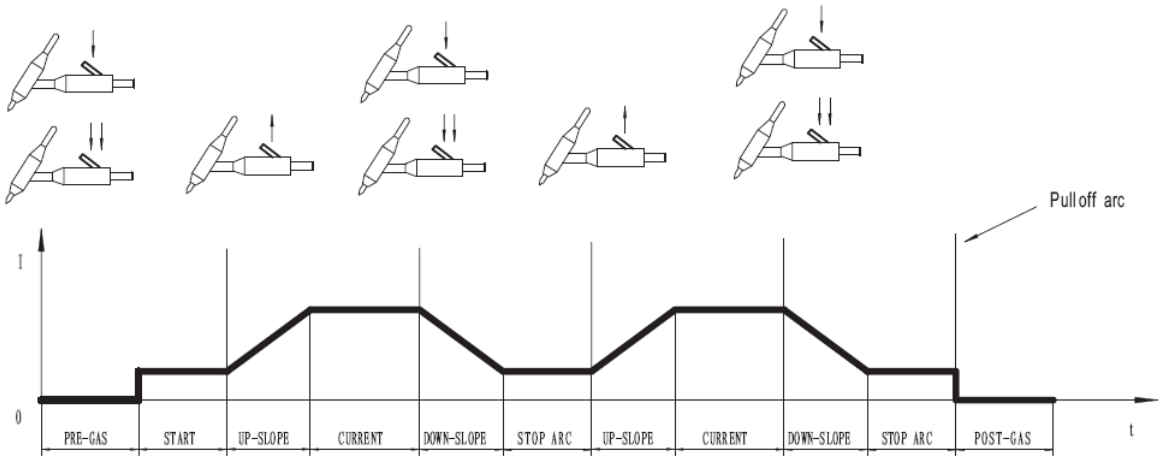

Fig. 4-3-7: Repeat mode

Spot weld mode

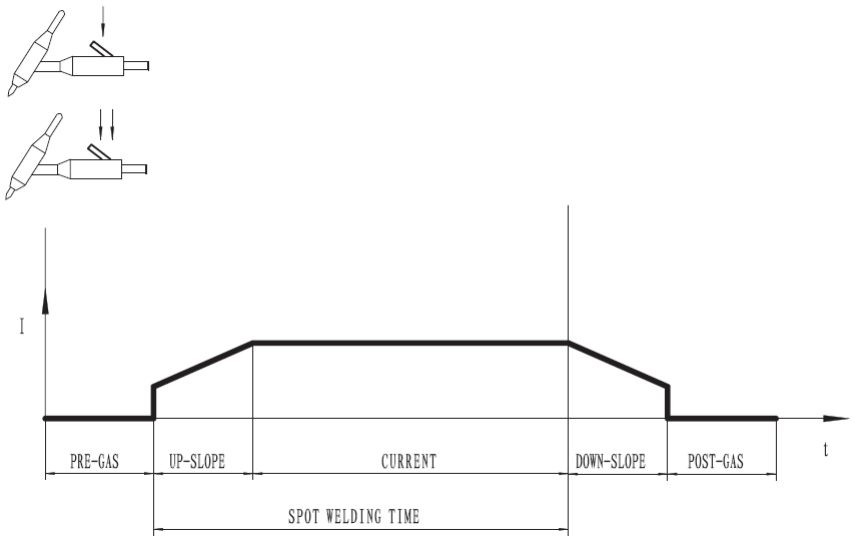

Fig. 4-3-8: Spot weld mode

5.Welding power parameters:

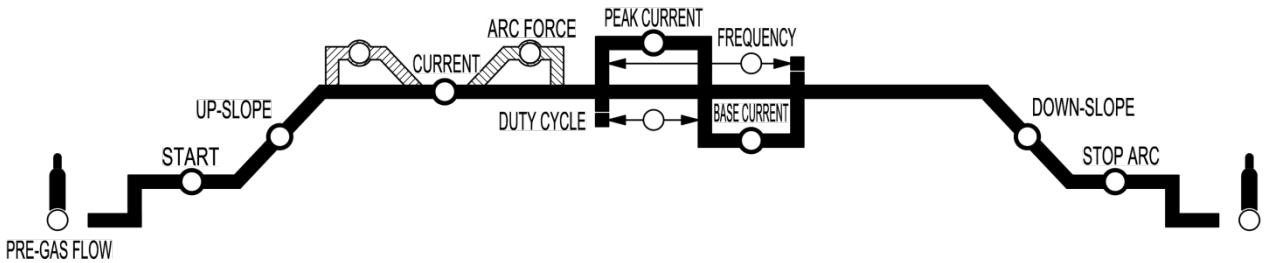

Fig. 4-3-9:Welding power source parameter

PARAMETER	Description CODE	Unit	Setting range	Factory setting
PRE-GAS FLOW	Time of gas flow before welding	Sec	0.1~9.99	0.05
START	The initial current after the arc is started	A	5~400	50
UP-SLOPE	Time of starting current is increased until it reaches welding current	Sec	0.1~10	0.1
HOT START	Current of starting arc on SMAW mode	A	5-200	50
CURRENT	Welding current while in the SMAW and DC TIG mode	A	4~410/510	100
ARC FORCE	Current of arc- force on SMAW mode	A	5-200	50
PEAK CURRENT	Welding current while in the DC Pulse TIG mode	A	4~410/510	100
DUTY CYCLE	The time proportion of peak current in single cycle under pulse mode	%	1~100	35
FREQUENCY	The frequency of welding current in pulse mode	Hz	0.2~20	4.0
BASE CURRENT	The arc maintenance current in pulse mode	A	5~410	50
DOWN-SLOPE	Time of welding current is continuously lowered until it reaches final current	Sec	0.1~15	0.1
STOP ARC	The current before arc blowout	A	5~400	50
POST-GAS FLOW	Time of gas flow after arc blowout	Sec	0.1~60	5.0

Table. 4-3-1: Parameter list

6.Hot wire power parameters selection

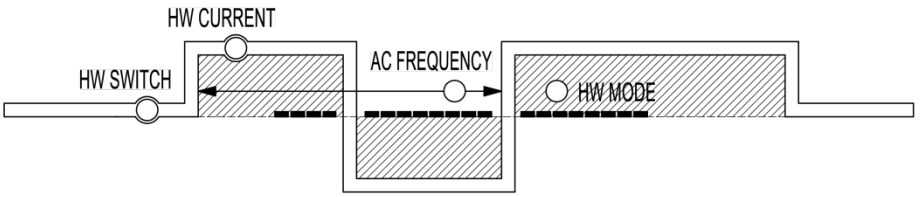

Fig. 4-3-9:Hot wire power source parameter

PARAMETER	Description CODE	Unit	Setting range	Factory setting
HW STITCH	ON/OFF the hot wire power	--	ON/OFF	OFF
HW CURRENT	Welding current while in the SMAW and DC TIG mode	A	10~200	30
AC FREQUENCY	The frequency of hot wire power in AC mode.	Hz	20~100	50
HW MODE	Time of gas flow after arc blowout	--	AC/DC	DC

Table. 4-3-2: Parameter list

7.SELECTION knob

-In TIG welding process, it is used for selecting the parameters that are described in 5 and 6. Rotate clockwise to select parameter from left to right; rotate anticlockwise to select parameter from right to left.

-In SMAW welding process, it is used for selecting hot start current/ constant current/ arc force.

8.ADJUSTMENT knob

-In TIG welding process, it is used for adjusting the parameters that are described in 5 and 6. When a parameter is selected by SELECTION knob, rotate this knob clockwise to increase the selected parameter; rotate this knob anticlockwise to decrease the selected parameter. Press this button and turn to left or right for quick adjustment;

-In SMAW welding process, it is used for adjustment value of hot start current/current/ arc force.

9.Left display

When the welding power supply is working properly, it displays the welding current and the value of each parameter. When the welding power supply is abnormal, the corresponding fault code will be displayed and shut down automatically.

10.Right display

When the welding power supply is working properly, it shows the welding power supply welding voltage or hot wire power parameter value.

Important! Thanks to the microprocessor control, the following functions can be realized:

All parameters that have been set can be automatically stored and will retain until the next time they are changed. This is true even if the power source is switched off and on again in the meantime.

4-4 Sub menu

Press and hold the adjustment knob and TIG/SMAW selection button at same time for 5 seconds to enter the sub menu interface, Adjust the parameter selection knob to select the parameter, adjust the parameter adjustment knob to set the value of the parameter.

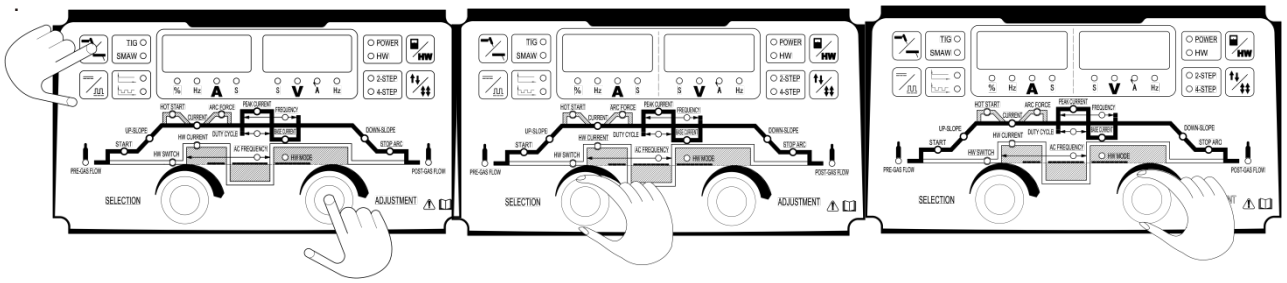

Fig. 4-5-1: Sub menu operation

Sub-menu parameter	Code	Description	Factory Setting
Remote/Local control	F00/F01 /F02/F03	F00-Local control,F01-Analog remote Control,F02-Digital remote control,F03- Group Control	F00
Reserve	F10/F11	F10/F11	F10
Repeat,spot welding setting	F20/F21/F22	F20-2T/4T only; F21-Repeat welding;F22-Spot welding	F20
HF	F30/F31	F30-HF,F31-No HF	F30
Base current controlled state	F40/F41	F40 - not greater than the peak current, F41 - not controlled by the peak current (Pulse mode)	F40
Tungsten diameter selection	P0.8-6.0	Tungsten diameter range P0.8-P6.0	P2.0
Spot welding time setting	H0.5-H5.0	Spot welding time range H0.5-H5.0	H2.0
Address	Pad 50-100	Welding machine address	50

Table. 4-4-1: Sub-menu parameters list

4-5 Switch between gas cooling/water cooling

When using water-cooling torch, press and hold the CC / pulse button and adjustment knob at same time for 2 seconds, the machine will display "E0A" code and set to water-cooling state. Start the water-cooling unit and the "E0A" code will disappear automatically as soon as the water-cooling unit operates properly (Fig. 4-5-1).

When using gas-cooled torch, press and hold the CC / pulse button and adjustment knob at same time for 2 seconds, the " E0A" code disappears and the machine is set to gas-cooling state. When using gas-cooled torch, welding machine does not show water shortage protection. (Fig. 4-5-1).

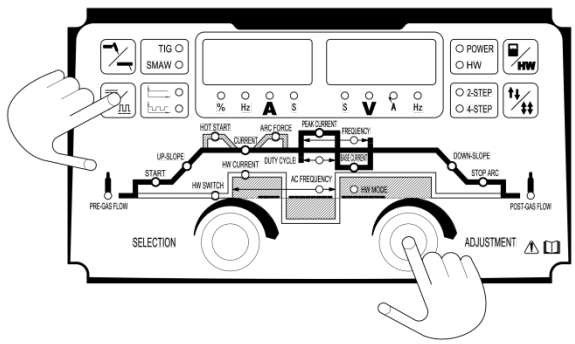

Fig. 4-5-1: Switch between gas cooling/water cooling

4-6 Restore to factory setting

Press and hold the Parameter adjustment knob and 2/4 step button at same time for 5 seconds to restore to factory setting (Fig. 4-6-1).

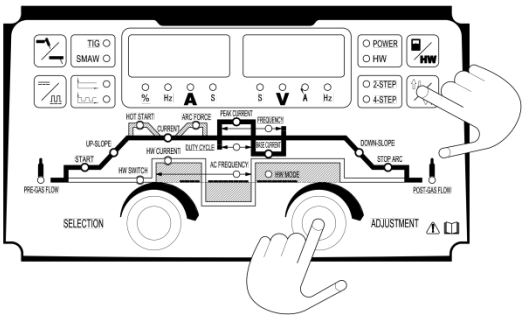

Fig. 4-6-1: Restore to factory setting

4-7 Interface

Note! You may find that your machine has certain functions or some parameters that are not described in this operating manual. Also, certain illustrations may be very slightly different from the actual controls on your machine. However, these controls function in exactly the same way.

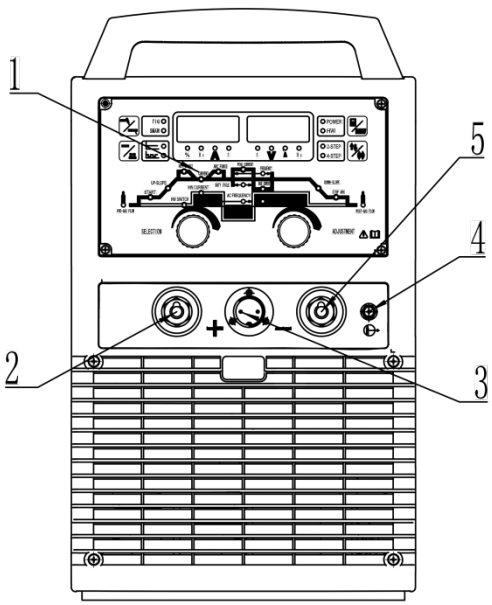

Fig. 4-7-1: Front panel

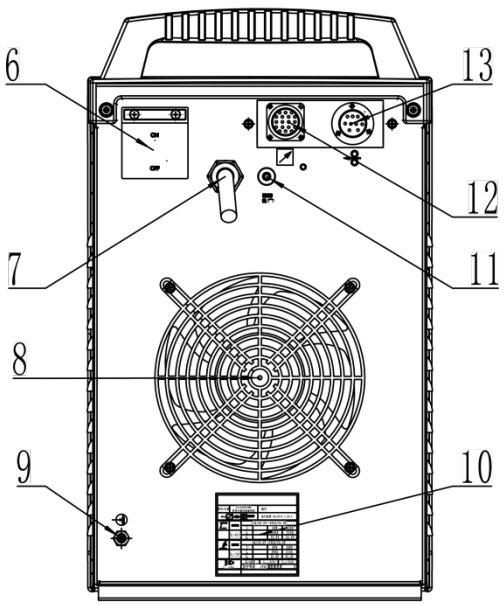

Fig. 4-7-2: Rear panel

1.Control panel

2.Output terminal (+)

Connect electrode holder when in SMAW mode; Connect with the work piece when in TIG mode.

3.Control socket

Connect to torch trigger.

4.Output terminal (-)

Connect work piece when processing SMAW; connect with TIG torch when processing TIG welding.

5.Gas outlet

Connect gas hose of TIG torch.

6.Circuit breaker

The function of circuit breaker is to protect welding machine and operator by automatic trip to turn-off power supply when overload or short circuit happens to the power source. Normally, the switch flipped to upward means power-on. To start or stop the welding machine is done by the mains switch in the distribution box. Please do not take this circuit breaker as the power switch.

7.Power cord

It is 4-pin cable. The mixed-colored wire must be firmly grounded, the rest wires are connected with corresponding 3-phase power supply.

8.Fan

Cooling down the heating components in the welding machine.

9.Gas inlet (part of solenoid valve)

Connect with Argon gas regulator with gas hose.

10.Nameplate

11.Over current protector

When the working current of the wire feeder exceeds the rated value, the protector would disconnect the power. After the overflow reason is excluded, it can be manually reset.

12.Special equipment control socket

Connect with special equipment. The description of the pins of this socket as follows:

Pin No.	Description
1	Chassis Ground，connect with shield layer of control cable.
2	Remote control mode enable: short circuit with pin 5 to enter remote control mode
3	Power supply of remote control current given potentiometer:10VDC
4	Remote control current input signal (0-10VDC).
5	Remote control current GND.
6	Welding machine start signal, short circuit with pin 8 ,welding machine start
7	Gas test signal, short circuit with pin 8,the gas valve on.
8	Common GND.
9	Arc voltage output,0-10VDC(10V equals to 100V arc voltage).
10	Welding current output signal,0-10VDC(10V equals to Max. rated output current).
11	Common GND.
12	Successful arc start signal: Standby: pin 12 and pin 13 open, successful arc start: pin12and pin13 short circuit
13	
14	Hot wire remote control mode enable: short-circuit with No.17 pin can determine the analog remote control status.

15	Power signal 10V, to connect external analog potentiometer high potential side.
16	Hot wire remote control current input given signal (0-10V).
17	Hot wire remote control current Gnd.
18	Hot wire remote control switch signal, short circuit with No.19 pin can start hot wire power.
19	Common GND.

Table 4-7-1 Description of control socket

Note! Special customized models may have different functions, please contact the supplier.

13.Wire feeder control socket

Function1:Connect with wire feeder via control cable.

Pin No.	Description
1	PE ground
2	33VAC Power supply for wire feeder.
3	33VAC Power supply for wire feeder.
4	Gas test signal. short circuit with pin 9,the gas valve on.
5	Reserved
6	Pulse sync signal
7	Pulse sync signal
8	Welding machine start signal. short circuit with pin 9 ,welding machine start
9	Common GND.

Table 4-7-2 Description of wire feeder control socket

Function2:To communication via 485 protocol(optional).

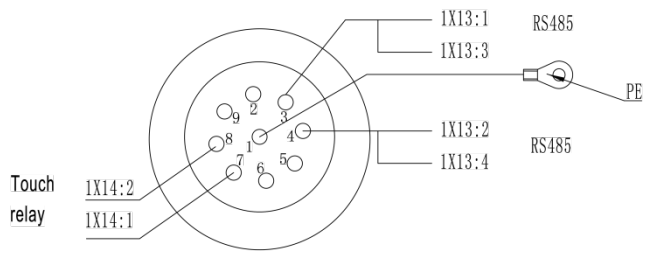

4-8 Technical data

Note! For machines designed for special voltages, below is the technical data on the name plate.

Model	PoWer TIG 4000 DC Pulse-HW
Input voltage/frequency	3 phase, AC380V/400V, 50Hz
Rated input capacity (KW)	18
Rated input current (A)	28
Output current adjustment range (A)	5～410A
Duty Cycle (%)	60
OCV (V)	73
Weight (Kg)	55
Dimension (cm)	67x33x58
Insulation class	H
Tungsten diameter(mm)	1～6
Electrode diameter(mm)	2～6

Table 4-8-1 Technical data

4-9 Dimension

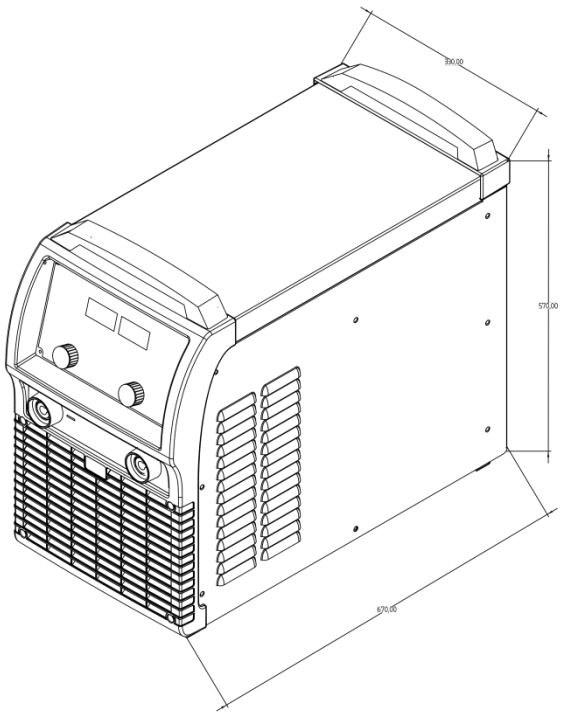

NO.	Item	Unit(mm)	Unit(inches)
1	length	670	26.4
2	Width	330	13
3	Height	572	22.5

Fig. 4-9-1: Dimension

Table. 4-9-1: Dimension

5-HW 200

5-1 features

This machine is a device that provides heating energy for the welding wire and is used in conjunction with the PoWer TIG 4000 DC Pulse-HW hotwire welding machine.

Features and benefits:

-MCU controlled technology

-Self-diagnostic function with error code display

-AC or DC current output

5-2 Functional principle

Hot wire power source apply IGBT HF inverter technology. 3- phase input volt is rectified, then transformed into HF AC by the inverter which includes IGBT, etc., reduced by HF transformer, rectified and filtered by HF rectifier, Then converted to AC through the inverter, then output. After this process, the welding machine dynamic response ability has been greatly improved, size and weight of transformer and reactor are reduced noticeably, and whole machine efficiency has been improved.

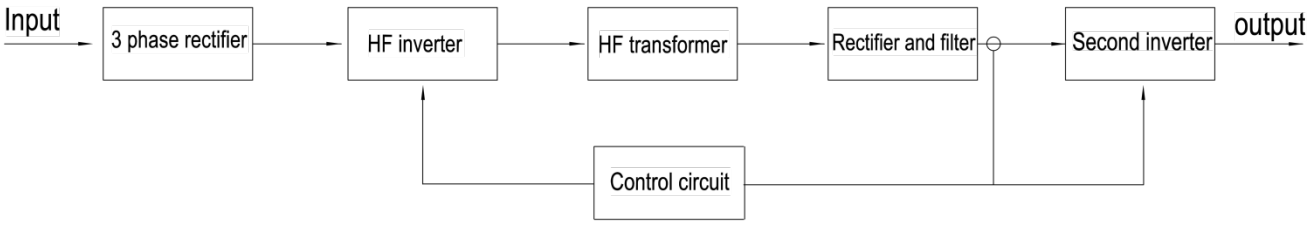

Fig. 5-2-1: Schematic diagram

5-3 Duty cycle

Duty cycle is percentage of 10 minutes that a machine can weld at rated load without overheating. If overheats, thermostat(s) will open, output stops. Wait for fifteen minutes for the machine to cool down. Reduce amperage or duty cycle before welding.

Note! Exceeding duty cycle can damage the machine and greatly reduce its lifespan.

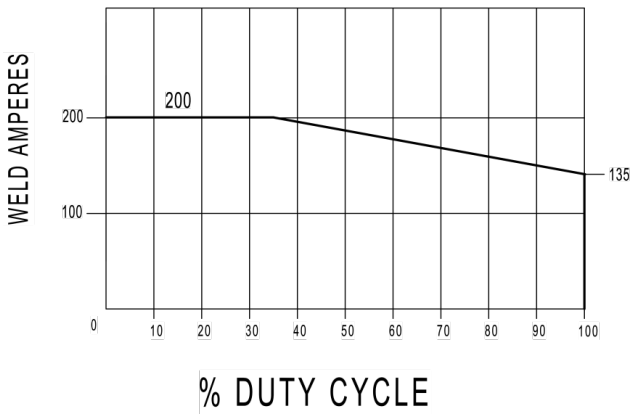

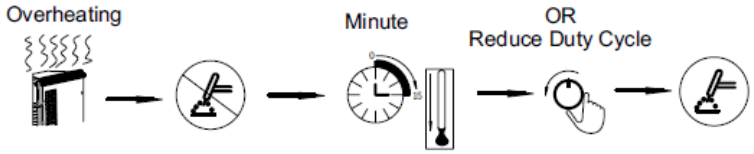

Fig. 5-3-1: Duty cycle

5-4 Interface

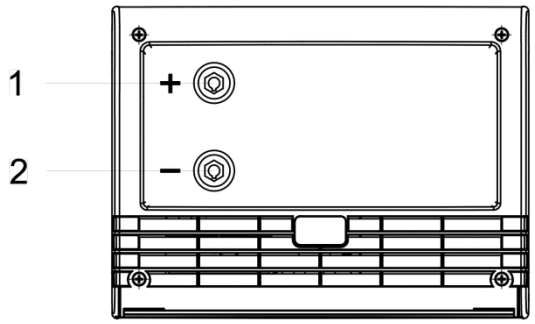

Fig. 4-5-1 Front Panel

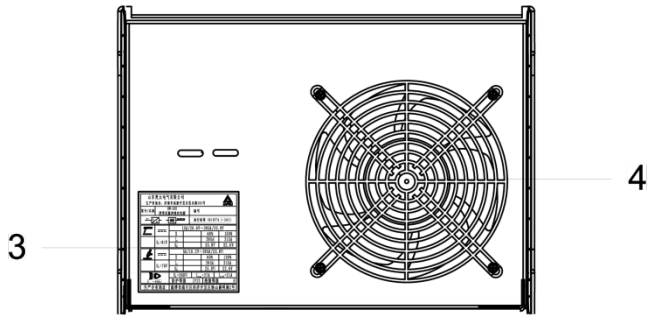

Fig. 4-5-2 Rear Panel

1.Hot wire power supply fast socket (+).

This socket is connected to the heating ground cable.

2.Hot wire power supply fast socket (-).

This socket is connected to the heating cable in the welding cables assembly.

3.Nameplate

4.Fan

Cooling the heating device in the machine. the fan starts work with the beginning of welding; After stopping the welding for 15 minutes, the fan stops working.

5-5 Technical data

Model	HW 200
Input voltage/frequency	3 phase, AC380V/400V,50/60Hz
Rated input capacity (KW)	2.6
Rated input current (A)	4
Rated duty cycle (%)	35
Output current range(A)	5～200A
OCV(V)	16
Weight (Kg)	21
Dimension (mm³)	69×34×29
Insulation class	H

Table 5-5-1: HW-200 technical data

5-6 Dimension

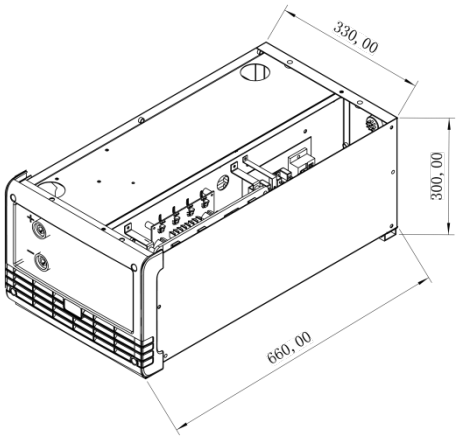

NO.	Item	Unit(mm)	Unit(inches)
1	length	660	26
2	Width	330	13
3	Height	300	12

Fig. 5-6-1: Dimension

Table. 5-6-1: Dimension

6-INSTALLATION AND OPERATION

● Installation environment requirements

1. It should be placed indoors without direct sunlight, rainproof, low humidity and less dust. The ambient air temperature range is -10℃~+40℃.

2. The inclination to the ground should not exceed 10°.

3. There should be no wind in the welding station, if any, it should be covered.

4. The welding machine is more than 20cm away from the wall, and the distance between the welding machine is more than 10cm.

5. When using water-cooled welding torch, pay attention to anti-freezing.

● Power supply and cable requirement

Please note the size of fuse and circuit breaker in the table below are for reference only.

Model		400
Input power supply		3 phase, AC380/400V±10%, 50/60Hz
Electricity grid min. power (KVA)	Power grid	25
	Generator	43
Input protection(A)	Fuse	50

	Circuit breaker	63
Cable size (mm²)	power cord	≥4
	Output cable	50
	Protective GND wire	≥4

Table6-1: Power supply and cable requirement

Note! Welding machine must be taken special design if it is powered by generator, please contact with manufacturer if you have such needs.

● **Connections of power cord and distribution box**

Warning! -Avoid hot-line work

- Operating by professional electrician

- Avoid connecting two power sources to one breaker

- Please refer to Table 6-1 to check if standard of input voltage, breaker and input cable is suitable

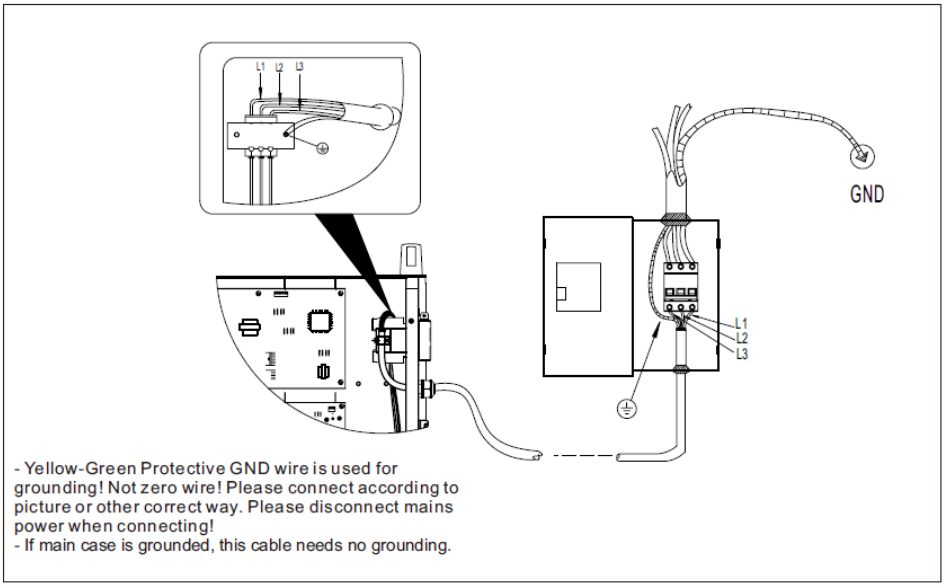

Fig. 6-2: Connections of power cord and distribution box

●**Gas cylinder installation**

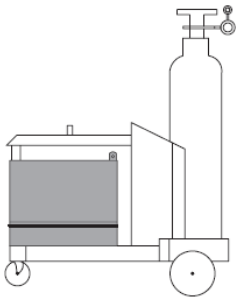

1. Stand the gas cylinder on the trolley and secure it by fixing the cylinder strap around a point in the top third of the cylinder-but never around the neck of the cylinder.
2. Take the protective cap off the gas cylinder.
3. Gently turn the gas-cylinder value anticlockwise, and blow off any dust and dirt.
4. Screw the pressure regulator onto the gas cylinder and tighten it.
5. Connect the shielding-gas connector to the pressure regulator.

Fig. 6-3: Gas cylinder installation

TIG welding

Warning! Operating the machine incorrectly can cause serious injury and damage. Do not use the machine until you have read the following

Safety rules

Before putting the machine into service

Warning! If the machine is plugged into the mains supply and the mains switch is in "O" position during preparation, there is a high risk of very serious injury and damage. Only carry out preparation when the machine is unplugged from the mains and the mains switch is off.

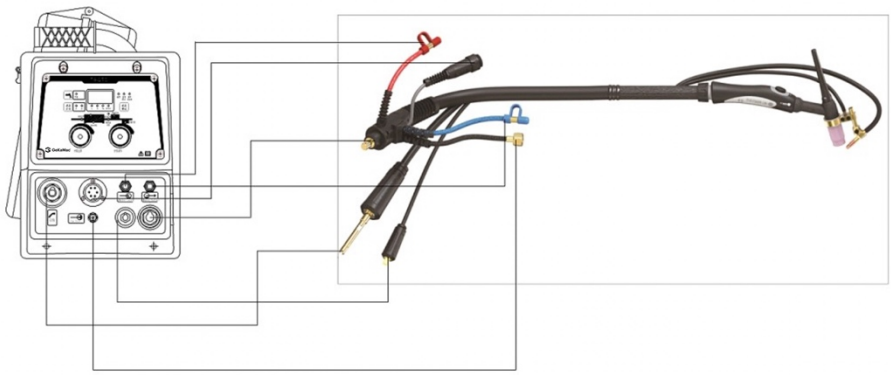

Fig. 6-4: Connection and operation for gas-cooled TIG welding

7-DISASSEMBLY AND REASSEMBLY

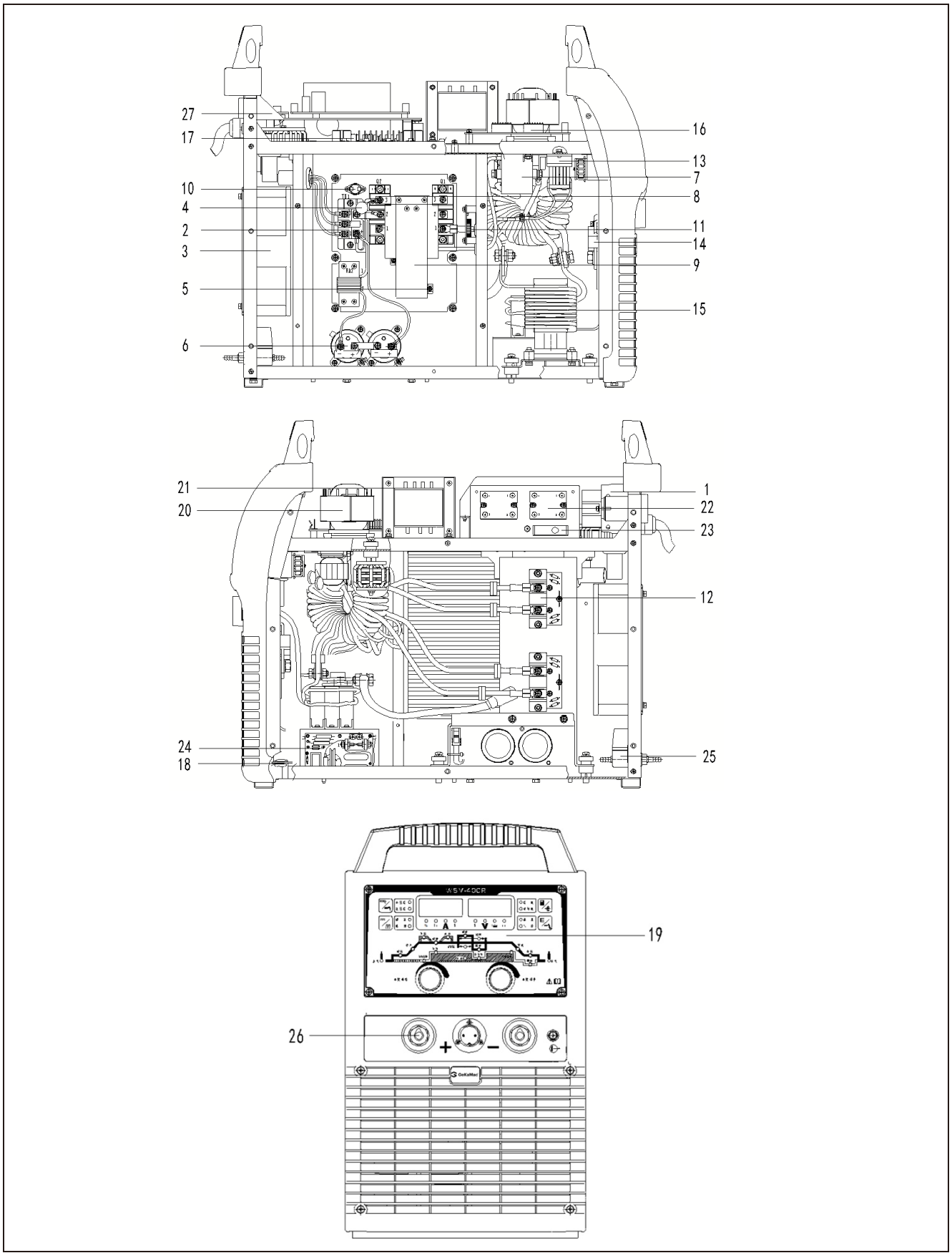

Fig.7-1: DISASSEMBLY AND REASSEMBLY

No.	Item	Stock No.for 400	Stock No.for 500	Qty	Remarks
1	Circuit breaker	745011-00021	745011-00022	1	
2	Three phase rectifier	735005-00002	735005-00002	1	
3	Fan	746001-00087(220V) 746001-00017(380V)	746001-00087(220V) 746001-00017(380V)	1	
4	Varistor	720021-00017	720021-00017	1	
5	Polypropylene capacitor	722001-00070	722001-00070	1	
6	Electrolytic capacitor	722004-00101	722004-00101	2	
7	Polypropylene capacitor	722001-00073	722001-00073	1	
8	IGBT Module	735007-00048	735007-00038	2	
9	IGBT protection board	220005-00138	220005-00136	1	
10	Temperature relay	745008-00006	745008-00006	1	
11	CT board	220149-00139	220149-00137	1	
12	Fast recovery diode	735006-00029	735006-00029	2/3	
13	Current exchange inductor	220281-00008	220281-00008	1	
14	Current sensor	753001-00122	753001-00020	1	
15	Output Reactor	763004-00177	763004-00146	1	
16	Main control board	210580-00955	210580-01266	1	
17	Drive board	210310-00118	210310-00118	1	
18	Capacitor rack board	220293-00009	220293-00009	1	
19	Display board	220503-00248	220503-00248	1	
20	Power transformer	763001-00033	763001-00033	1	
		763001-00326	763001-00326	1	CE
21	Power transformer	763001-00062	763001-00062	1	
		763001-00049	763001-00049	1	CE
22	Solid state relay	715004-00003	715004-00003	2	
23	Fuse	745007-00012	745007-00012	1	
		745007-00011	745007-00011	1	CE
24	HF ingition board	220900-00292	220900-00292	1	
25	Solenoid valve	752001-00007	752001-00007	1	
26	Quick socket	740002-00026	740002-00026	2	
		740002-00027	740002-00027	2	CE
--	Filter	752004-00017	752004-00017	1	CE

Table7-1:Spare parts

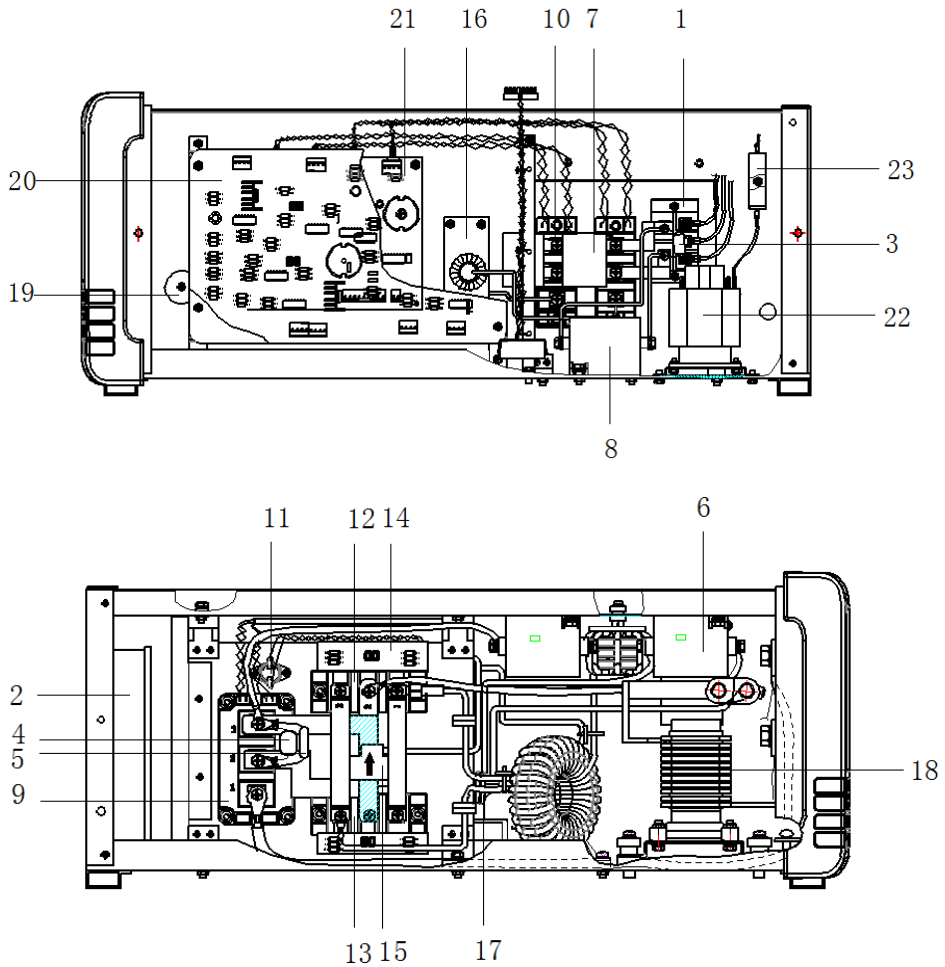

Fig.7-2: HW 200

No.	Item	Stock No.	Qty	Remarks
1	Three phase rectifier	735005-00009	1	
2	Fan	746001-00109	1	380
		746001-00106	1	CE
		746001-00109	1	220
3	Resistor	720003-00002	2	
4	Polypropylene capacitor	722001-00024	1	
5	Resistor	720003-00002	1	
6	Polypropylene capacitor	722001-00070	2	
7	Polypropylene capacitor	722001-00067	1	
8	Polypropylene capacitor	722001-00070	1	
9	Secondary IGBT module	220221-00001	1	
10	IGBT module	735007-00046	2	
11	Temperature relay	745008-00008	1	
12	Fast rfecovery diode	735006-00056	1	
13	Fast rfecovery diode	735006-00055	1	
14	Diode protection board	220233-00007	2	
15	Current sensor	753001-00064	1	

17	Commutation inductor	220287-00001	1	
19	Given anti-jamming inductor	220269-00027	1	
20	Main control board(HW)	210580-01182	1	
21	Drive board(HW)	210310-00124	1	
22	Power transformer	763001-00033	1	
		763001-00326	1	CE
23	Fuse	745007-00012	1	
		745007-00011	1	CE
--	Filter	752004-00017	1	CE

Table7-2:Spare parts

8-TROUBLE SHOOTING

Warning! An electric shock can be fatal. Before opening the machine:

-Switch it off and unplug it from the mains

-Unplug machine from the mains

-Put up a clearly legible and easy-to-understand warning sign to stop anybody inadvertently switching it back on again

-Check to make sure the electrically charged components (e.g.capacitors) have been discharged.

-Bolt in outer case also works for ground connection. Never use other bolt, which can not work for ground connection.

Machine problem, cause and remedy

Note! The following troubles and causes are uncertain. However, during the process of TIG series and the normal using conditions, these might happen.

No.	FAULT	CAUSE	REMEDY
01	Indicator light does not light on and welding machine doesn't work when machine switches on	Default phase	Check power source
		Fuse (2A) is broken	Check whether the fan, power transformer and control board are in good condition
		Wire disconnection	Check and repair
02	Circuit breaker trips automatically except working for a long time in high welding current	IGBT module, three phase rectifier, or output diode module is damaged	Check and replace
		Short circuit	Check and replace
03	Welding current is not stable	Default phase	Check power supply
		Main control board is damaged	Check and replace main control board
04	The welding current is not adjustable	Inner line is broken	Check and replace
		Main control board is damaged	

Table 8-1: Trouble shooting

● **Error code display**

This series of machines have automatic protection and error code display function. Relevant Cause & Remedy can be found according to below Error codes, as shown in Table 8-2

code	Trouble	Cause	Remedy
E10	Torch trigger fault	No current output after pressing torch trigger for 2s	Release torch trigger
E19	Over-heat protection	The welding machine is over heat; Temperature Relay fault Main control board damaged	Shut down the welding machine and wait for cooling; or replace Temperature Relay
E0A	Water-cooling is abnormal	No circulating water in water cooling system Water flow sensor damaged	Check and repair

Table 8-2: Displayed error code

Hot wire power machine problem, cause and remedy

№	Description	Causes	Remedy
1	After power on, hot wire power does not work	①Power phase loss	①Check
		②Fuse broke	②Check fan power Transformer main control board
		③Line break	③Check lines
2	Circuit breaker trips automatically when work correctly	①The following components may be damaged: the IGBT module, the three-phase rectifier module.	①Check and replace if necessary
		②Drive board fault	②When IGBT is damaged, the components of the output part of the drive board may also be damaged, check and replace.
		③Interline short circuit	
3	Hot wire welding current instability	①Power phase loss	①Check and replace if necessary
		②Hot wire power main control board damaged	
		③Sensor damaged or poorly connected	
4	Hot wire welding current is not adjustable	①Rotary encoder fault	①Check and replace if necessary
		②Display board fault	
		③Main control board fault	
5	There is display but no DC output	①The following components may be damaged: primary IGBT module, three-phase rectifier.	①Check and replace if necessary
		③Drive board fault	②When IGBT is damaged, the components of the output part of the drive board may also be damaged, check and replace.
		④Main control board fault	②Replace
6	play and DC current output but no AC output	①The following components may be damaged: secondary IGBT module, output diode module	①Check and replace if necessary
		②Main control board	When IGBT is damaged, the main control board needs to be replaced also

7	Overheat protection--E19	①Power internal overheating (beyond the rated load sustained rate use, the vents are blocked)；	①Check the fan, waiting for the welding power supply internal cooling;
		②Temperature relay fault；	②Check the temperature relay connection;
		Signal line failure；	③Replace the temperature relay;
		③Main control board fault；	①Replace

Table 8-3: hot wire power source fault

9-CARE AND MAINTENANCE

Before open the machine

Warning! An electric shock can be fatal. Before opening the machine:

Switch it off and unplug it from the mains.

Put up a clearly legible and easy-to-understand warning sign to stop anybody inadvertently switching it back on again.

Check to make sure the electrically charged components (e.g. capacitors) have been discharged.

Bolts in outer case also work for ground connection. Never use other bolt that can not work for ground connection.

Maintenance of welding power source

Please follow the instructions as below to ensure normal use of power source

- Conduct safety check at regular intervals (see “Safety rules”).

- Dismantle machine side panels and clean machine inside with clean and low-pressure compressed air by professional technician, not less than twice per year. Clean the components at a certain distance only.

- If a lot of dust has accumulated, clean the cooling-air ducts.

Maintenance of water-cooled welding torch

For water cooled welding torch:

- Check the connections of water cooling system.

- Check the coolant level, cleanliness of coolant etc. (clean coolant only).

- Frequently check coolant’s back flow state.

PoWer TIG Series

GeKaMac®

Gedik Welding Inc.
Ankara Caddesi No: 306 Şeyhli 34906 Pendik - İstanbul / Turkey
P. +90 216 378 50 00 • **F.** +90 216 378 20 44
www.gedikwelding.com